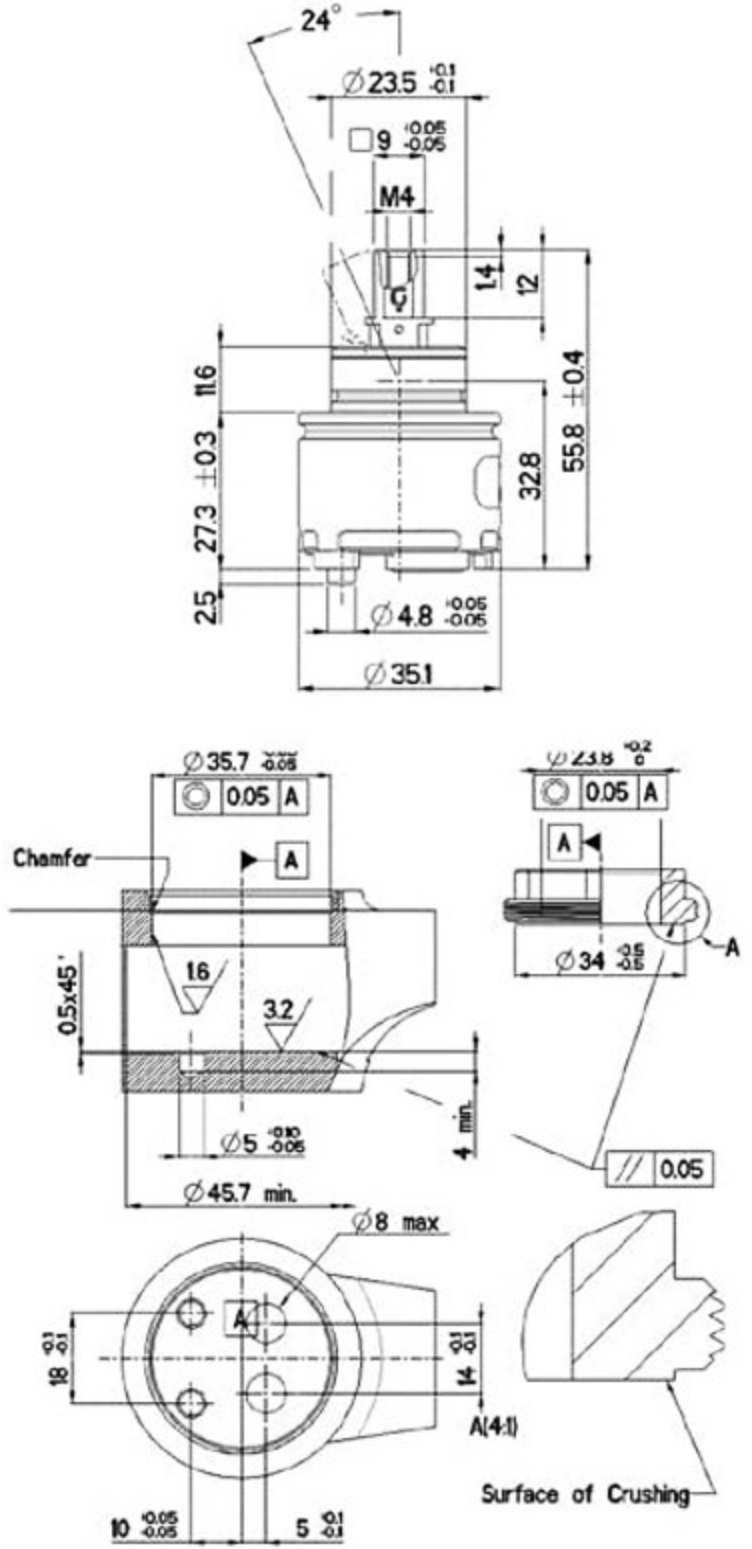
24°
Ø23.5 +0.1 -0.1
□9 +0.05 -0.05
M4
1.4
12
11.6
27.3 ±0.3
32.8
55.8 ±0.4
2.5
Ø4.8 +0.05 -0.05
Ø35.1
Ø35.7 +0.05 -0.05
0.05 A
Chamfer
A
1.6
3.2
0.5x45°
Ø5 +0.10 -0.05
4 min.
Ø45.7 min.
Ø23.8 +0.2 0
Ø34 +0.5 -0.5
0.05
Ø8 max.
18 +0.1 -0.1
14 +0.1 -0.1
A(4:1)
10 +0.05 -0.05
5 +0.1 -0.1
Surface of Crushing